ENGINAATOR 2026 FINAL TASK DESCRIPTION

Table of contents

1. INTRODUCTION 1
2. TASK DESCRIPTION 2
3. SYSTEM SPECIFICATION 3
3.1. Paper grid layout 3
3.2. Command Interface 4
3.3. Sample Code 5
3.4. Test Application 6
4. SCHEMATICS 8
4.1. Switches 8
4.2. Powering the Arduino 8
4.3. Stepper Motor Controller 8
4.3.1. DRV8825 Stepper Motor Driver 9
4.3.2. Microstepping 9
4.3.3. Configuring the DRV8825 voltage 10
4.3.4. Cooling 10
5. SHOPPING SYSTEM 11
6. EVALUATION CRITERIA 11
7. SAFETY GUIDELINES 12
8. GENERAL RECOMMENDATIONS 12

1. INTRODUCTION

The task for the Final of Enginaator 2026 is in the field of robotics. Solving it will require a degree of competency in all the fields of the Engineering competition. The competing teams shall have 24 hours to construct a prototype that will perform according to specifications contained in this document. Then their solution will be evaluated by a panel of judges and awarded points based on how well it performs.

2. TASK DESCRIPTION

The final task for Enginaator 2026 is to create a 2d Arduino-driven drawing machine. Unlike a 3d printer, this 2d plotter shall operate only on the X and Y axis. The machine shall draw on a piece of A4 paper. The device must be completely automatic and the only input from the user shall be in the format of commands transmitted over the serial port. Refer to the Command Interface chapter under System Specification for details.

Unlike a 3d printer that uses a filament extruder to build 3d shapes, this drawing device will use a simple permanent marker to draw on a piece of paper. Just like for a commercial plotter device, motion shall be provided by a set of NEMA-17 stepper motors.

In order to solve this task you have been provided with a set of electronic components as well as construction materials. The competition final also employs a shopping system that will allow you to purchase additional components and materials from stores. Refer to the appropriate chapter for a description of the shopping system.

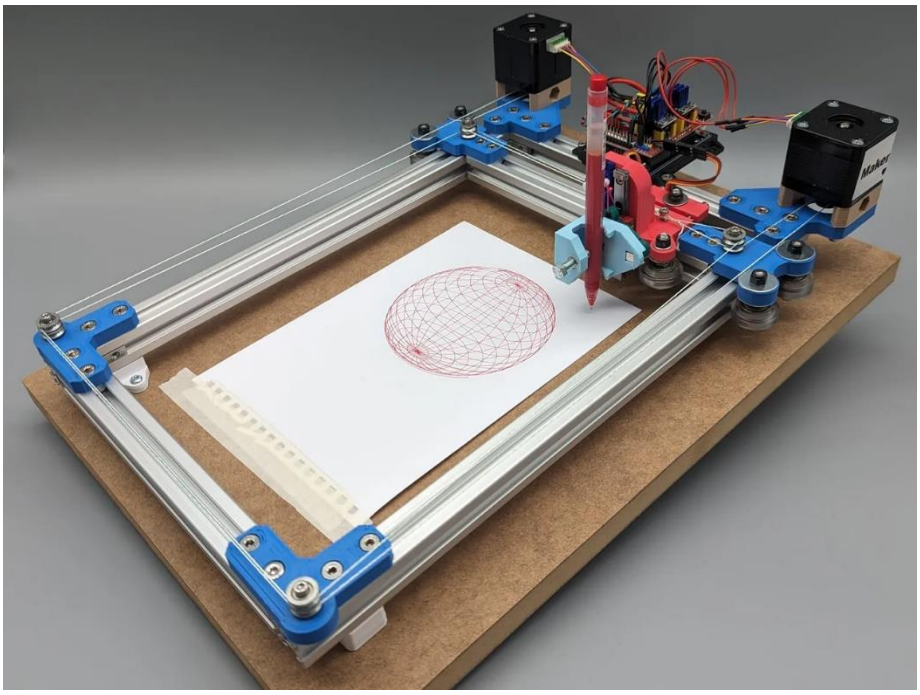

Figure 1 - An example of an XY plotter that uses a pen for drawing

3. SYSTEM SPECIFICATION

The 2d plotter shall conform to the following set of requirements.

3.1. Paper grid layout

A standard A4 paper has dimensions of 210 x 297mm. There shall be a top margin of 4mm, bottom margin of 3mm and left/right margin of 5mm. This leaves us with a drawing area of 200 x 290mm.

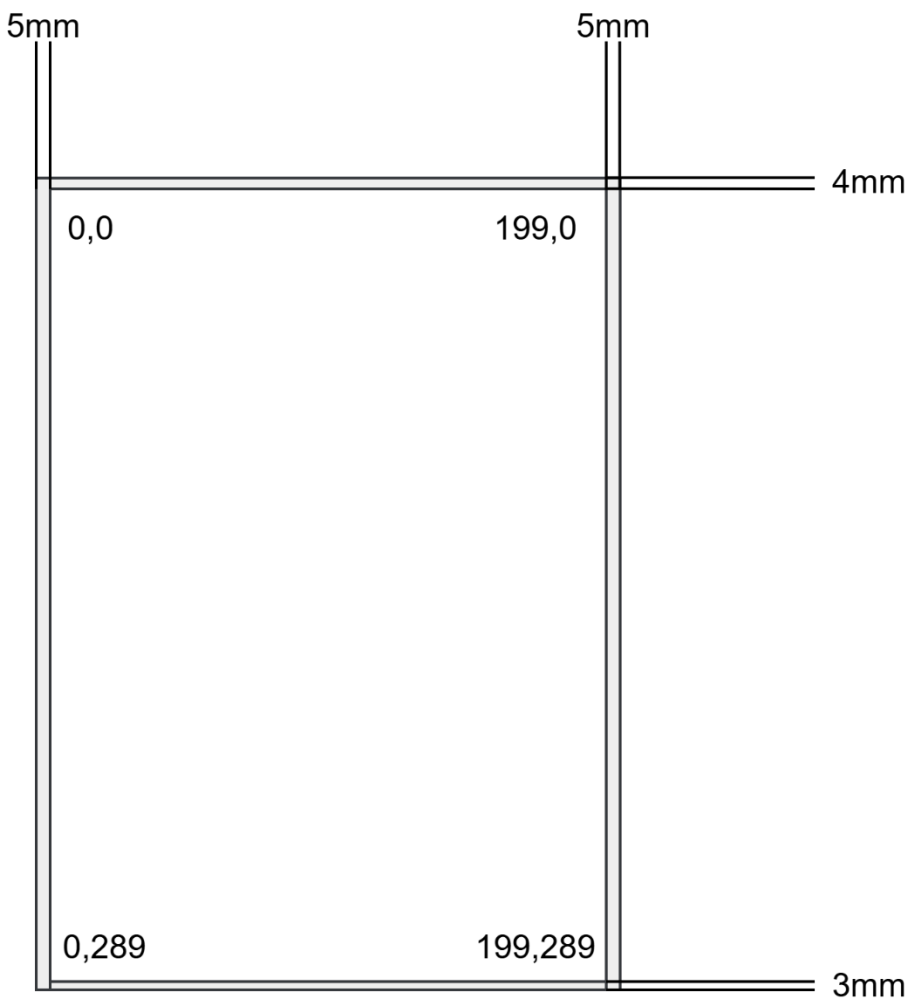

The coordinates for the X axis begin at 0 at the left side of the paper and end with 199 at the right side of the paper. The coordinates for the Y axis begin at 0 at the top side of the paper and end at 289 on the bottom.

3.2. Command Interface

Commands shall be provided one at a time over the Serial Interface of the Arduino Uno R4. For this task we have defined a simple pseudo g-code interface to drive the drawing machine.

Command	Description
`HOME`	Machine moves to coordinates 000,000
`MOV:XXX,YYY`	Machine moves to coordinates X,Y. Note that coordinates should be provided with 3 digits and preceding zeroes. So for example MOV:010,002 is a valid command
`DOT:XXX,YYY`	Machine makes a single dot at coordinates XXX,YYY
`LINE:XXX,YYY,XXX,YYY`	Machine draws a straight line between point 1 and point 2.
`SQUARE:XXX,YYY,WWW,HHH`	Machine draws a square with its top left point at XXX,YYY and its width set to WWW and height set to HHH
`CIRCLE:XXX,YYY,RRR`	Machine draws a circle with its centerpoint defined by XXX,YYY and its radius defined by RRR.
`ARC:XXX,YYY,RRR,AAA,BBB`	Machine draws an arc, XXX, YYY is the centerpoint, RRR is the radius, AAA is the start angle and BBB the end angle.
`LOGO`	Machine draws your interpretation of the Stoneridge logo on the paper.

Example:

Here we want the machine to draw a line beginning at the point with X coordinate 010 and Y coordinate 020. The line should end at the point with X coordinate 010 and Y coordinate 100.

This should create a vertical straight line. The command for achieving this is : `LINE:010,020,010,100`
Note that the actual X and Y values might or might not have preceding zeroes in front of them, so this command might look like this:

```
LINE:010,020,010,100
```

OR like this

```
LINE:10,20,10,100
```

In any case the resulting drawing should look something like this:

You have been provided with a small application that will translate commands for you and show you roughly what your machine should produce with your inputs.

3.3. Sample Code

You have been provided with a sample code that can be used to drive two stepper motors and a servo simultaneously. Use the Arduino IDE to compile and load the code onto the Arduino Uno R4.

The sample code consists of the following files:

File	Description
Arduino_Sample_Code.ino	The main program is contained here. It can be opened with the Arduino IDE and edited as necessary
StepperMotor.cpp	The driver that handles running stepper motors in real time. The code is used to control the DRV8825 stepper motor drivers
StepperMotor.h	The header file for the stepper motor driver. The API for the driver can be seen here.

The files should look something like this:

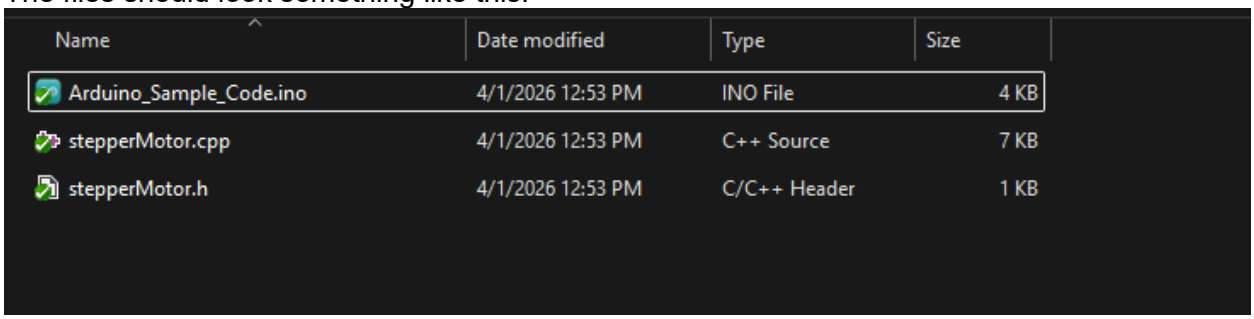

Name	Date modified	Type	Size
Arduino_Sample_Code.ino	4/1/2026 12:53 PM	INO File	4 KB
stepperMotor.cpp	4/1/2026 12:53 PM	C++ Source	7 KB
stepperMotor.h	4/1/2026 12:53 PM	C/C++ Header	1 KB

As long as these files are kept in the same folder, the Arduino IDE should be able to access them. The folder needs to be named “Arduino_Sample_Code” in order for the IDE to work properly.

It is strongly recommended that you familiarize yourself with the main code contained in the .ino file as well as the source code for the stepper motor driver contained in StepperMotor.cpp. You will likely have to make some modifications to the driver itself in order to get your solution to work.

We recommend that you create a copy of the original files though, before starting to modify them. It is recommended to connect the stepper motors to the DRV8825 and verify that the sample code runs without issues before starting to make modifications.

Pin Connections for the sample code:

Pin Number	Function
0	DIR pin for the DRV8825 board driving Motor 1
1	STEP pin for the DRV8825 board driving Motor 1
2	ENABLE pin for the DRV8825 board driving Motor 1
6	DIR pin for the DRV8825 board driving Motor 2
7	STEP pin for the DRV8825 board driving Motor 2
8	ENABLE pin for the DRV8825 board driving Motor 2
10	Servo control pin

Note that both the servo as well as the stepper motors need additional connections for GND and V+ in order to work. Refer to instructions for setting up these components under the chapter SCHEMATICS.

3.4. Test Application

You have been provided with a test application that can be used to send commands over a serial port. It will also show a simulated drawing of what should appear on the paper that is currently being drawn to. In order to use it with your solution you must first open the correct COM port and set the baud rate that is used for your Arduino code.

Enginaator2026App.exe	4/7/2026 2:32 PM	Application	30 KB
Enginaator2026App.exe.config	2/20/2026 11:17 AM	CONFIG File	1 KB
Enginaator2026App.pdb	4/7/2026 2:32 PM	Program Debug D...	82 KB

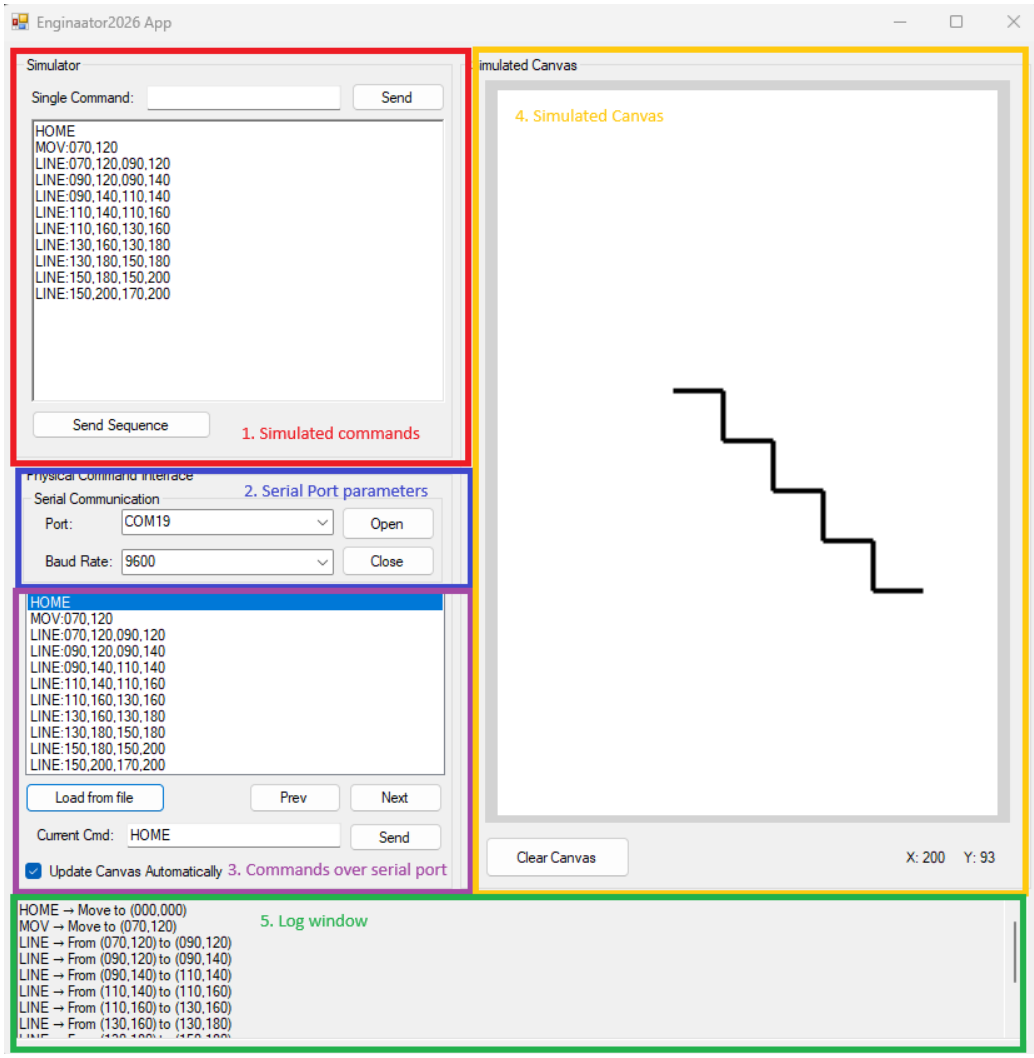

1. Simulated commands

   This panel allows you to write commands and show what the expected output should be on the canvas. Note that this panel has no connection with the physical serial port.

2. Serial Port parameters

   The serial port needs to be set up in this panel. The baud rate and the COM port need to

match your Arduino setup. Once the port has been opened, then commands can be sent over this interface.

3. Commands over serial port

   You can send commands one at a time. In order to send multiple commands, you can use a text file to set up a sequence of commands. Several test sequences have been provided for you that can be used to test your machine.

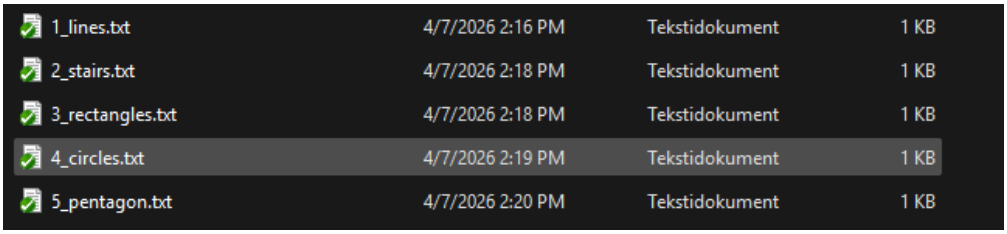

1_lines.txt	4/7/2026 2:16 PM	Tekstidokument	1 KB
2_stairs.txt	4/7/2026 2:18 PM	Tekstidokument	1 KB
3_rectangles.txt	4/7/2026 2:18 PM	Tekstidokument	1 KB
4_circles.txt	4/7/2026 2:19 PM	Tekstidokument	1 KB
5_pentagon.txt	4/7/2026 2:20 PM	Tekstidokument	1 KB

   When running the commands and the “Update Canvas Automatically” checkbox is ticked, then the canvas will display what should be drawn on your machine.

4. The Simulated Canvas

   The canvas shows you roughly what the commands you use should look like on your drawing machine.

5. Log window

   The log window is updated with each command and operation. It can show errors and warnings if something goes wrong with the program.

Note that you can write your own test sequences in .txt files. This is a good way to set up your presentation during the final evaluation of your solution.

4. SCHEMATICS

Here are some useful schematics for designing electronics for the 2d drawing machine. It is strongly recommended that you go through these especially if your team does not have much experience in building and designing electrical circuits. These schematics can help you avoid costly mistakes that could damage or destroy your components.

4.1. Switches

Note that if you want to use switches as inputs for the Arduino, then these should not be connected in a way that allows current to flow directly from the power source into an Arduino input pin. This will in fact constitute a short circuit and will likely damage or destroy the Arduino.
Instead the buttons should be connected with a pullup resistor.

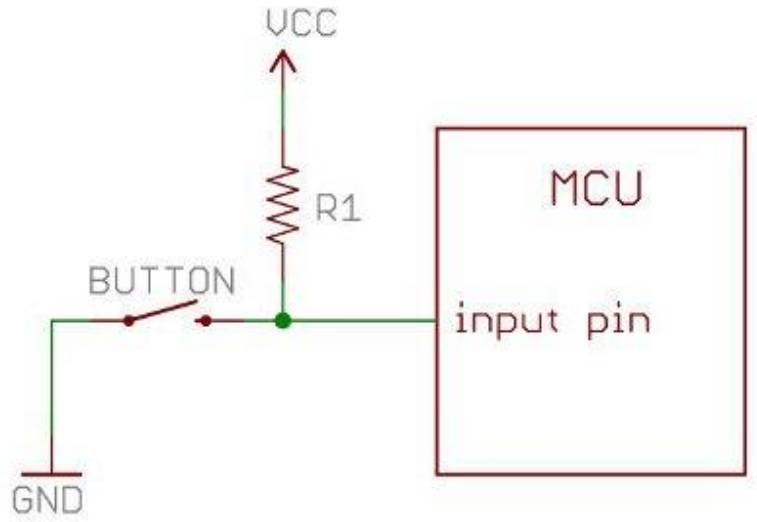

Note that the exact value of R1 is not critical in this circuit. Using any value between 10k and 100k should be fine for a pullup switch.

4.2. Powering the Arduino

The Arduino can be powered with a USB cable that is connected to an USB socket for testing purposes. For your actual solution, you might want to drive it with the 12V power supply. This is done through the Vin pin on the Arduino board. The Vin pin supports a range of 6-24V, so the 12V power supply falls nicely into the supported range.

It is unadvisable to have the USB cable as well as the power supply connected at the same time as this could damage the USB port or the Arduino itself.

4.3. Stepper Motor Controller

You have been provided with a set of Nema 17 bipolar Stepper motors. These kind of stepper motors are often used in 3d printers as well as plotter devices similar to ones that you are being tasked to build. The motors need far more power than an Arduino Uno R4 can provide, so you have also been provided with a 12 V power supply capable of delivering up to 3.0A of current.

Unlike ordinary DC motors, Stepper motors move in precise, discrete steps. This allows them to move in precise small increments and allows to control their movement very precisely. It makes stepper motors the natural choice for devices that need fine control of movement, such as 3d printers.

4.3.1. DRV8825 Stepper Motor Driver

Unlike a DC motor it is not possible to simply drive a stepper motor by powering it on. In order to drive the motors you have been provided with DRV8825 stepper motor controllers. These devices contain 2 H-bridges that drive the two coils inside the motor.

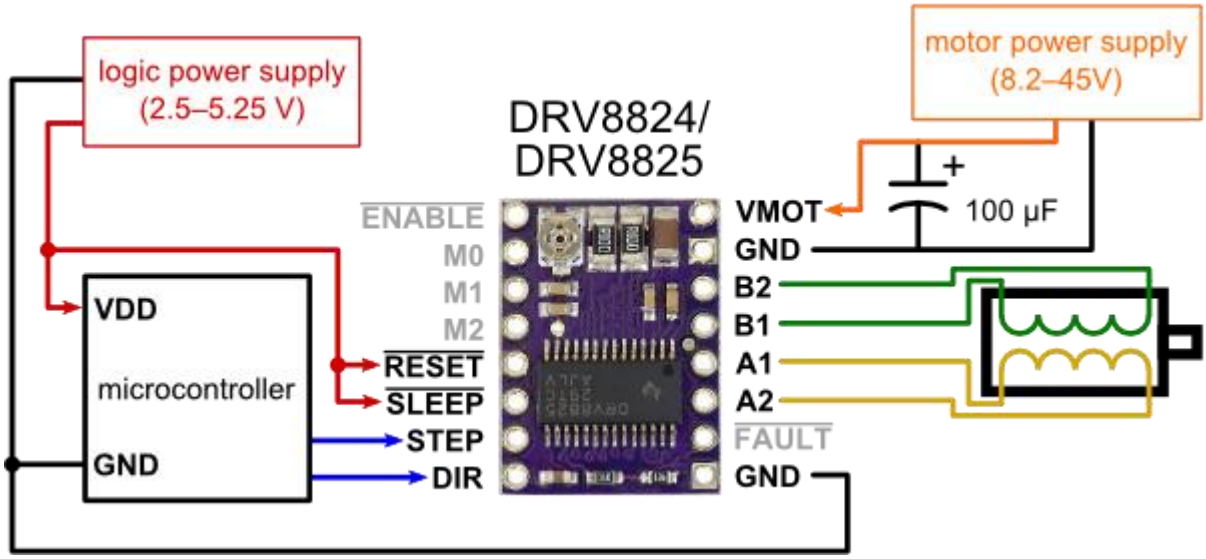

NOTE that the ENABLE pin should also be connected to the Arduino microcontroller. This allows the board to de-energize the motor when it is idle. Otherwise the stepper motor will continue drawing large amounts of current even when idle. This will cause the motor to heat up and can cause issues.

4.3.2. Microstepping

Microstepping is a technique that divides a stepper motor's fullsteps into smaller "microsteps" by modulating the current in the motor coils to act like sine waves. By controlling the current ratio between phases, the rotor stops at intermediate positions, providing smoother, quieter motion, reduced resonance, and higher resolution.

In practical applications, no stepper motor is driven at “full steps” as this will result in it very coarse movement that causes a great deal of vibration.

Fortunately, the DRV8825 microcontroller takes care of microstepping for you. The pins M0, M1 and M2 are used to configure microstepping. These can be connected to the Arduino 5V output in order to configure the microstepping mode.

IMPORTANT! Microstepping mode should not be changed during operation. We recommend setting it up with physical connections so that everything is already in place when the device powers on.

MODE0	MODE1	MODE2	Microstep Resolution
Low	Low	Low	Full step
High	Low	Low	Half step
Low	High	Low	1/4 step
High	High	Low	1/8 step
Low	Low	High	1/16 step
High	Low	High	1/32 step
Low	High	High	1/32 step
High	High	High	1/32 step

We recommend configuring the DRV8825 to work at at least 1/8 microstep resolution.

4.3.3. Configuring the DRV8825 voltage

It might be necessary to manually adjust the screw on top of the DRV8825 in order to provide more or less torque to the stepper motor. Instructions for doing this can easily be found online. If the motor moves too weakly and seems to struggle, then it might be necessary to increase the power setting. If the motor seems to draw too much current and heats up rapidly, then it might need to be decreased.

4.3.4. Cooling

During operations, stepper motors produce a lot of heat. The DRV8825 boards need to be cooled in order to prevent overheating. The stock radiator on the DRV8825 that comes with it might not be able to provide sufficient cooling. We have provided some larger radiators that can be attached. Additionally you can use a 12V fan to provide active cooling to the DRV8825.

IMPORTANT! Continous operation can heat up the stepper motors significantly! Monitor their temperature so you don't risk damaging the motors or causing dangerous situations.

5. SHOPPING SYSTEM

For the final task you are provided with an **extra budget of 100.00€**. You can compile a list of desired materials, and these will be provided to you by the BEST-Estonia organizer team. Please refer to their exact instructions on how to use the shopping system and order materials through it.

6. EVALUATION CRITERIA

Your solution will be evaluated by a panel of judges. During the evaluation a set of commands will be given to the drawing machine and you will be awarded points based on the output.

First Round

You can freely define a set of 4-10 commands. Then run these commands one by one in your machine. The output of the machine shall then be evaluated.

Second Round

The judges themselves will provide a set of commands to the machine and evaluate the drawing output.

When grading the performance of the machine the following criteria will be taken into account:

1. The output of the machine. First and foremost the machine needs to draw shapes on a piece of A4 paper. Also the precision of the machine shall be evaluated – correct shapes in the wrong location do not make any sense.

2. The reliability of the machine – How sturdy the construction looks, how reliably it performs, how often does the drawing create unwanted artifacts or malformed shapes.

3. Operability : How practical the machine is to operate. For example how well is the A4 paper inserted and removed afterwards. How accessible is the drawing area etc.

Points

Category	**Points**
Machine Output Quality during First Round	0-100
Machine Output Quality during Second Round	0-100
Machine reliability	0-50
Machine Operability	0-50
Total	0-300 points

7. SAFETY GUIDELINES

- **High-Voltage Safety**
  - The 220V mains cable must **only** be used to power the Power Supply Unit (PSU).
  - Never route 220V into any other parts of your project or experimental setup.

- **Electrical Checks**
  - Before powering the system, inspect all wiring for **short circuits** or loose connections.
  - Verify all voltage levels and connections match the specifications of your components.
  - If unsure about a schematic or electrical connection, ask help from the organizing team or instructors.

- **Overheating & Fire Hazards**
  - Continuously monitor stepper motors, controllers, drivers, and power electronics.
  - Immediately stop the system if any component becomes **excessively hot**, sparks appear, smoke is detected, or a burning smell occurs.
  - Never leave electrical devices running unattended.
- **Mechanical Safety**
  - Keep fingers, hair, clothing, and loose objects away from moving parts, belts, pulleys, and stepper motor shafts.
  - Ensure the mechanical assembly is **stable and secure** before operation.
  - Never attempt to manually move motors or mechanisms while powered.
- **Power Tools & Assembly**
  - Always wear appropriate **safety goggles** when cutting, drilling, or using hand/power tools.
  - Work in a **clean, well-lit, and uncluttered** workspace.
  - Ensure power tools are switched off and unplugged when not in use.
- **Emergency Procedures**
  - Keep track of shut-off points in your schematics. Be ready to unplug a device when necessary.
  - Know the location of a **fire extinguisher** nearby.
  - Report any **damaged or malfunctioning equipment** to the instructors immediately.
- **General Good Practices**
  - Wear **closed-toe shoes** and avoid loose clothing or jewelry.
  - Keep liquids away from electronics and mechanical parts.
  - Label all wiring clearly to prevent mistakes.
  - Follow any additional instructions provided by the instructors.

8. GENERAL RECOMMENDATIONS

For this task it is recommended to begin with getting the stepper motors set up and work. Once you have the motors working you can begin to achieve a greater degree of control over them. Ultimately your success at this task depends much on the understanding of how stepper motors work and how they should be controlled. Take some time to get a better understanding of the inner workings of the motor. There are plenty of materials online that give good explanations.

The task in front of you is complex and it will require the work of a whole team of engineering students to successfully solve. Try to work as a team and in parallel. The 2d plotter has many moving parts. Try not to run into situations where a single person can work on a critical part and the rest of the work is stopped.

Begin testing with simpler software, verify that everything works as expected and then add complexity. Trying to code everything all at once will likely lead to a situation where you have to start from scratch.

A good estimate is that by the half point of the final task, meaning 12 hours, you should have at least one axis of the device moving as expected, if not both. This will leave plenty of time for testing and fine-tuning your device. It will also allow you to experiment with more complex drawing algorithms. These things take time to get right, so don't leave them to the last moment.

One technical recommendation is to not overly rely on the solderless breadboards. If at all possible, try to solder the critical parts of your solution. A soldered connection is much more reliable and much less likely to fail at the worst possible moment.

From our team at Stoneridge Electronics we wish you a successful Engineering Competition and an enjoyable experience!